# 7. SYNCHRONOUS PIPELINES

# I/O PIPELINED DATAPATH

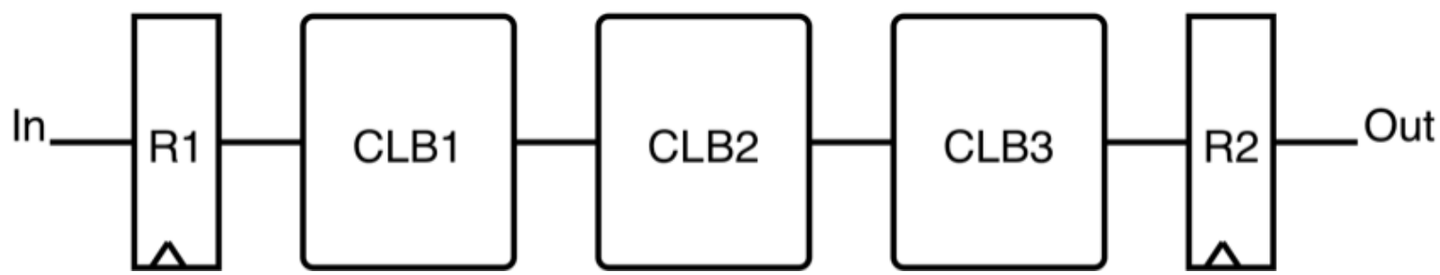


- Three events in a clock period
  - Data exits first register
  - Data propagates through combinational logic
  - Data arrives ahead of setup in R2

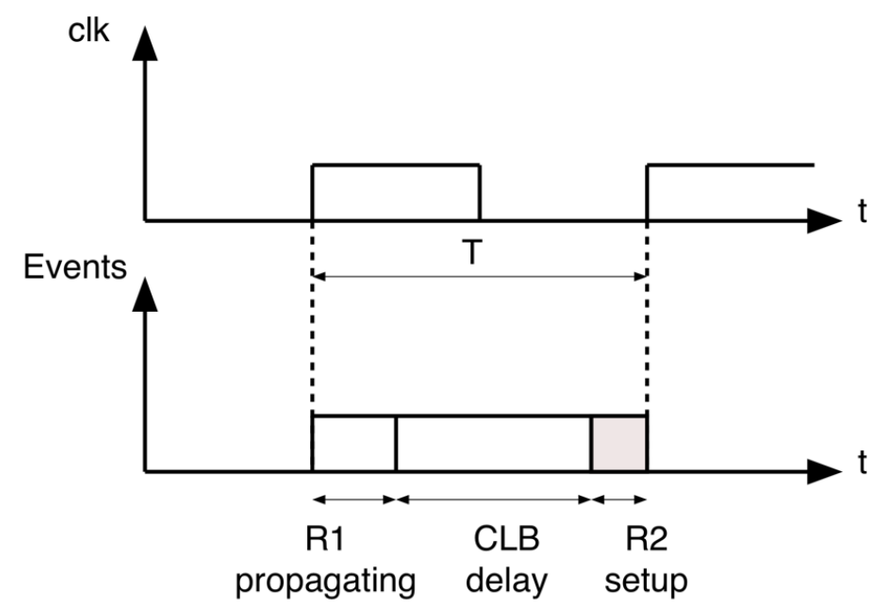

# OPERATING FREQUENCY

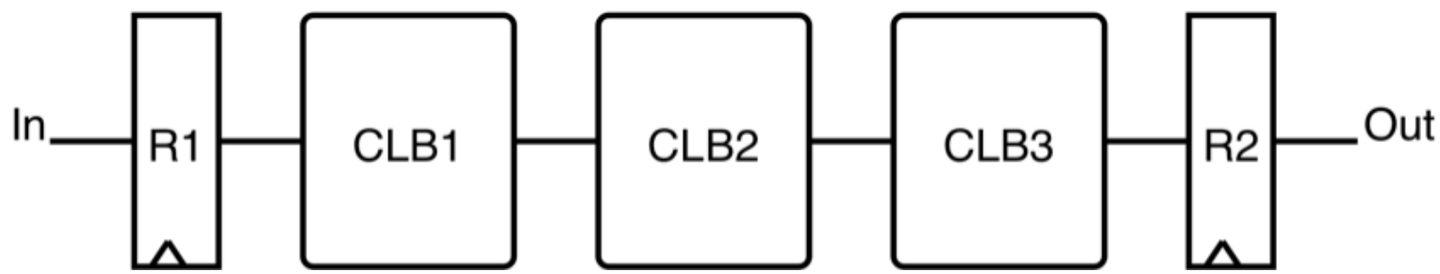


$$T \geq t_{CQ_R1} + t_{CLB1} + t_{CLB2} + t_{CLB3} + t_{su_R2}$$

$$T \geq t_{CQ} + t_{pd_combinational} + t_{su}$$

$$f \leq \frac{1}{t_{CQ} + t_{pd_combinational} + t_{su}}$$

# CIRCUIT WITH MULTIPLE PATHS

$$T \geq t_{CQ} + t_{CLB1} + t_{su}$$

$$T \geq t_{CQ} + t_{CLB2} + t_{CLB3} + t_{su}$$

$$T \geq t_{CQ} + t_{CLB4} + t_{CLB5} + t_{CLB6} + t_{su}$$

$$T \geq t_{CQ} + t_{CLB7} + t_{CLB8} + t_{CLB9} + t_{su}$$

$$T \geq t_{CQ} + t_{CLB10} + t_{su}$$

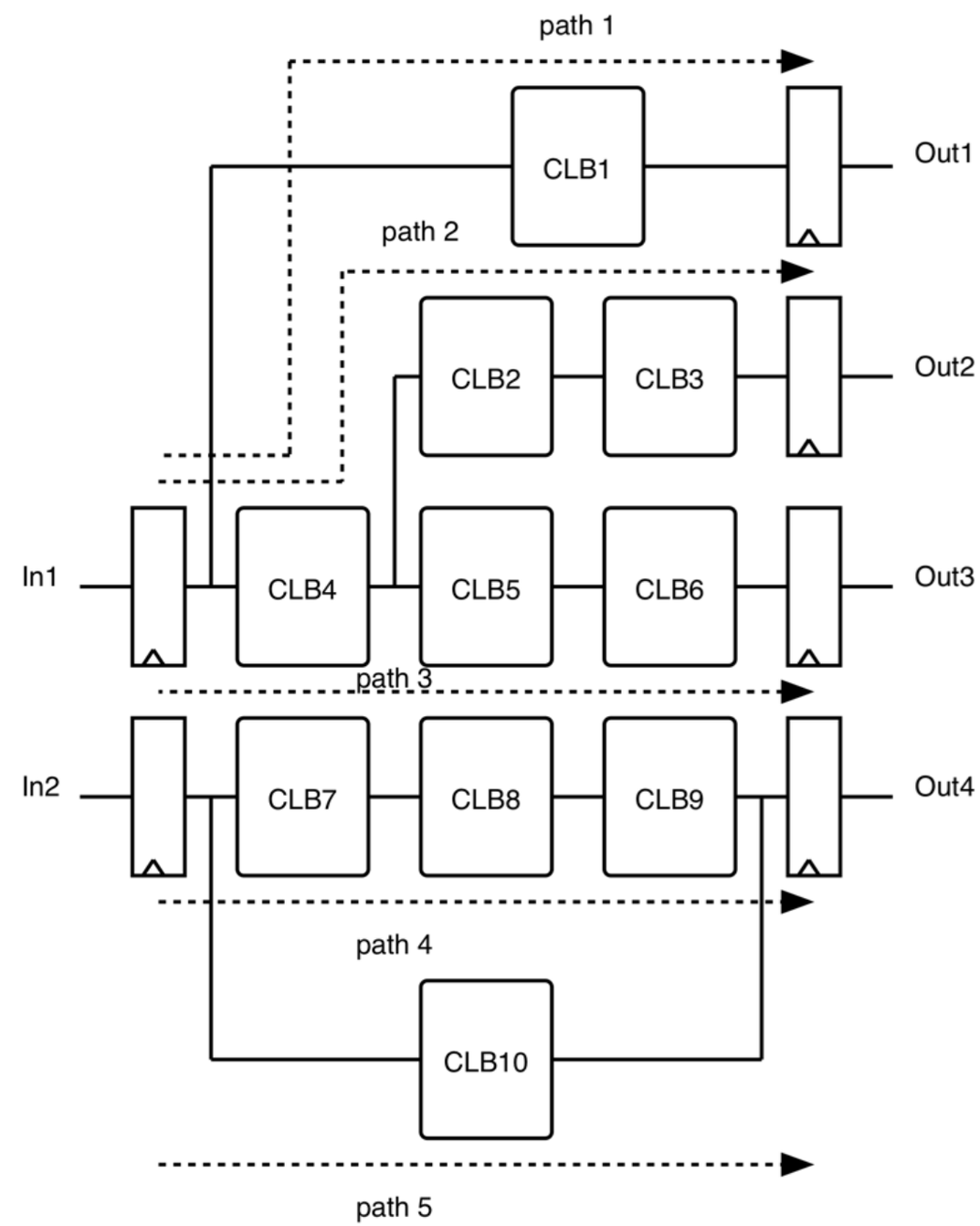

# SYNCHRONOUS CIRCUIT

- Must pick only one clock period, which?

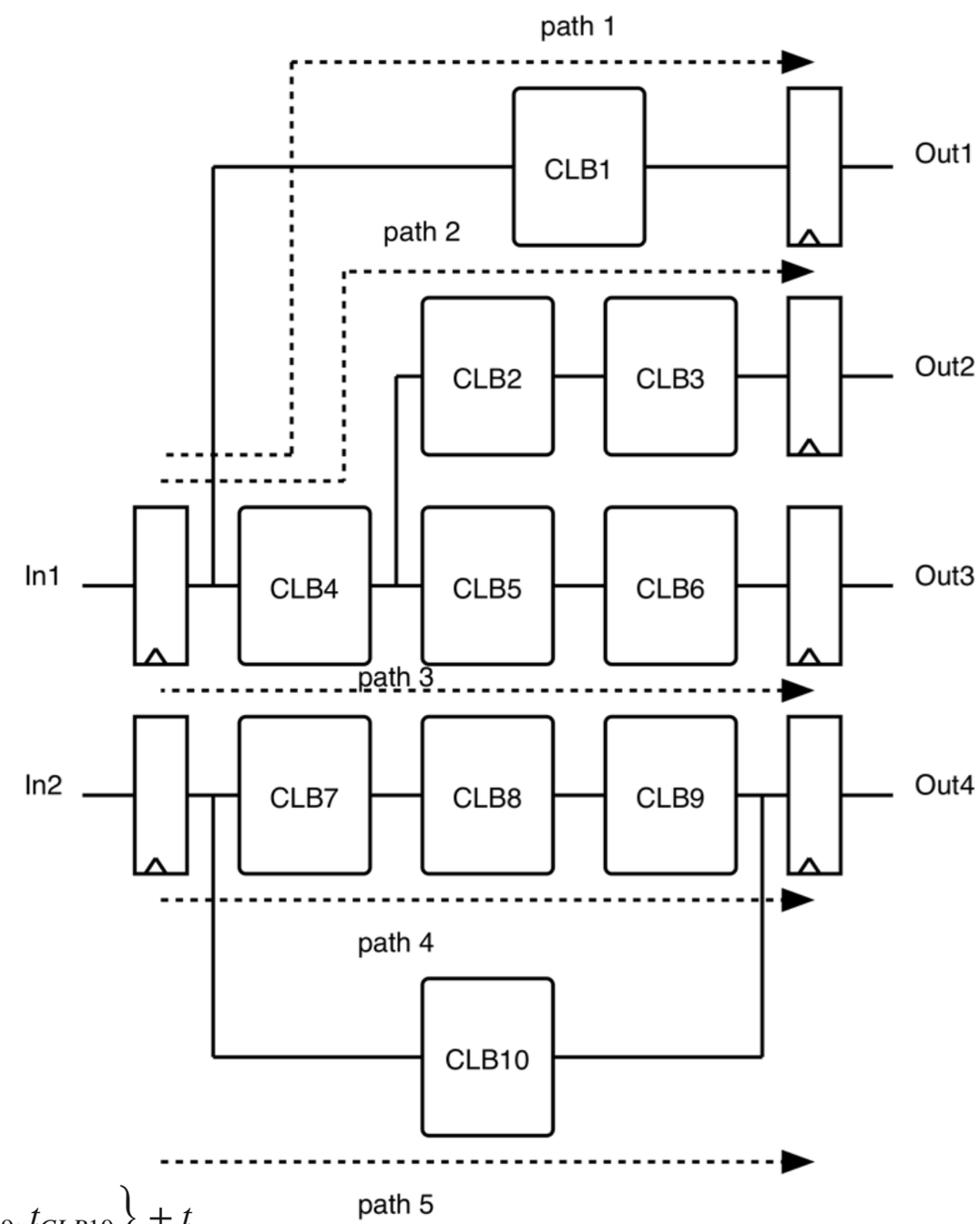


$$T \geq t_{CQ} + \max\left\{ t_{CLB1}, t_{CLB2} + t_{CLB3} + t_{CLB4}, t_{CLB4} + t_{CLB5} + t_{CLB6}, t_{CLB7} + t_{CLB8} + t_{CLB9}, t_{CLB10} \right\} + t_{su}$$

# THE CRITICAL PATH

- When choosing the clock period setup time and tcq are basically constant
- The only variable is propagation delay
- We must choose the period with the largest combinational delay between two registers
  - This path is called the critical path
  - Its delay is called the critical path delay

# IMPROVING PERFORMANCE

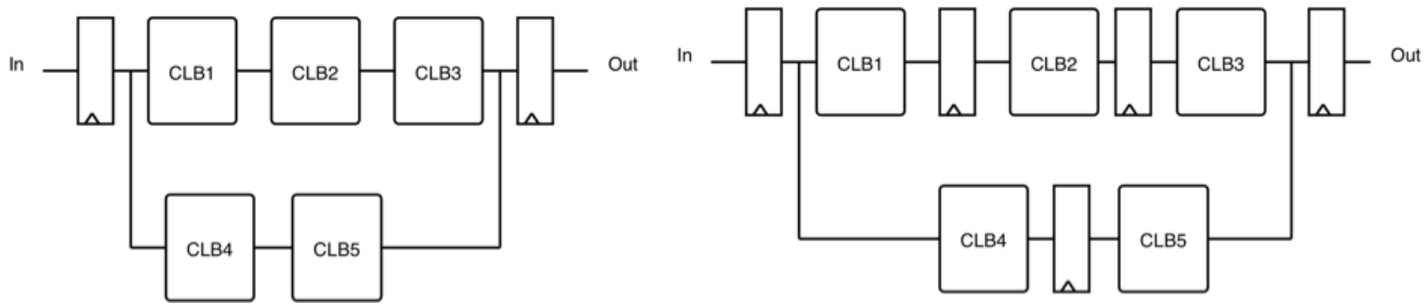


- If operating frequency is unsuitable
  - Break a path by inserting internal registers
  - Which path?
    - Evidently the critical path

# PROPERLY BREAKING PATHS

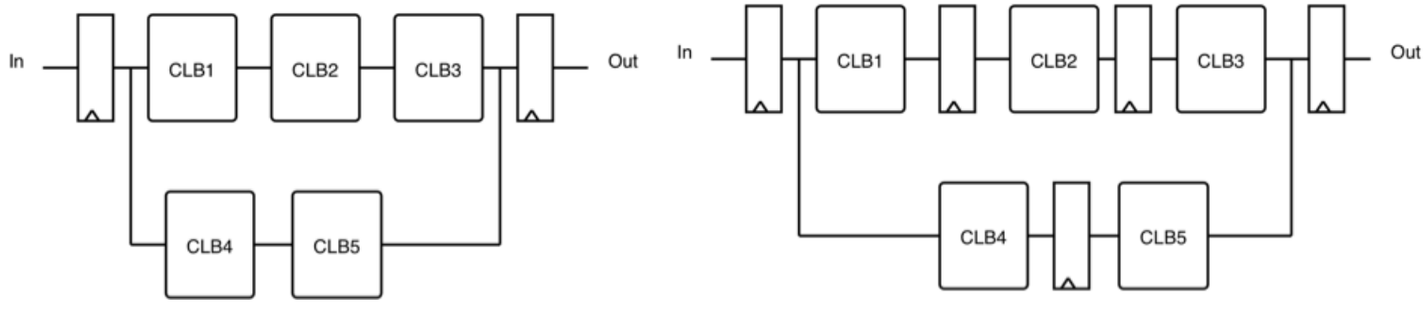


- The best way to break paths is to break the critical path nearly in half
  - The new critical path may migrate somewhere else so must check and break if necessary

# SLACK

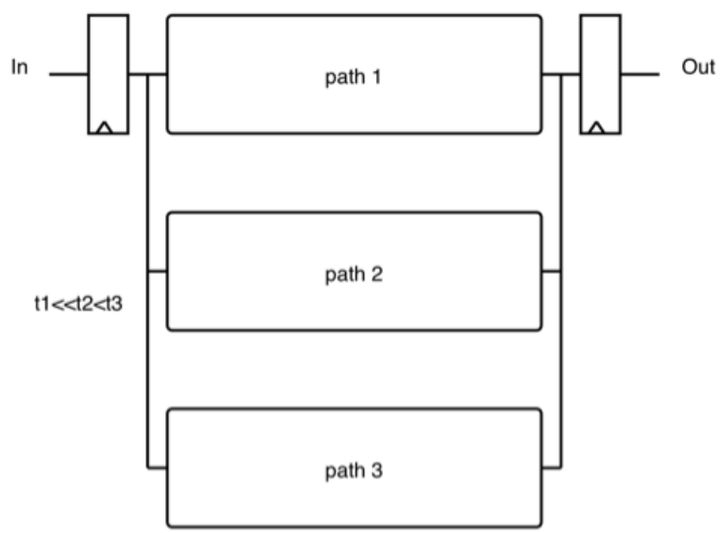


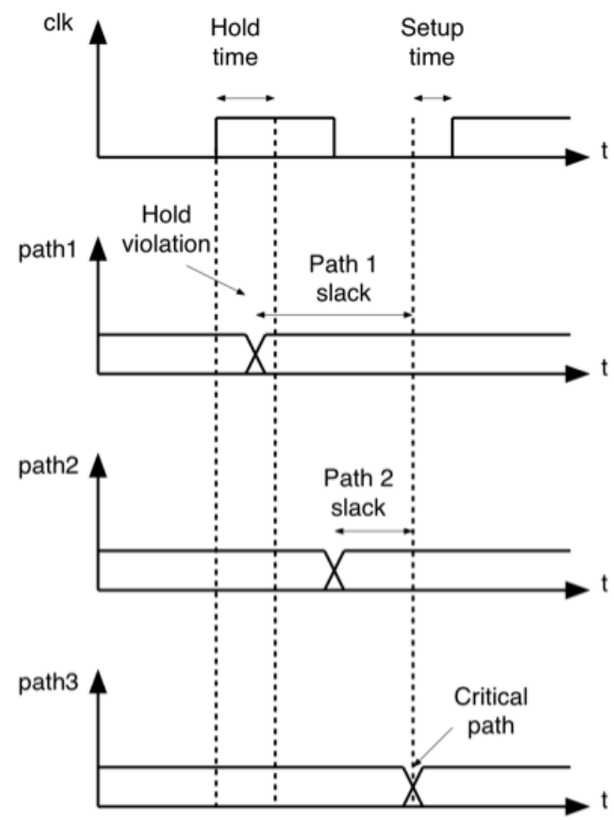


- Slack is defined as the amount of time the signal arrives ahead of the critical path
- The critical path has zero slack

# LARGE POSITIVE SLACKS

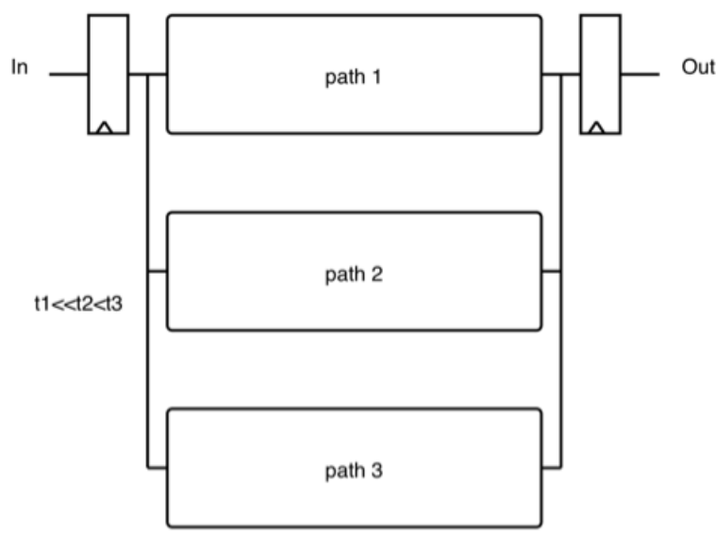


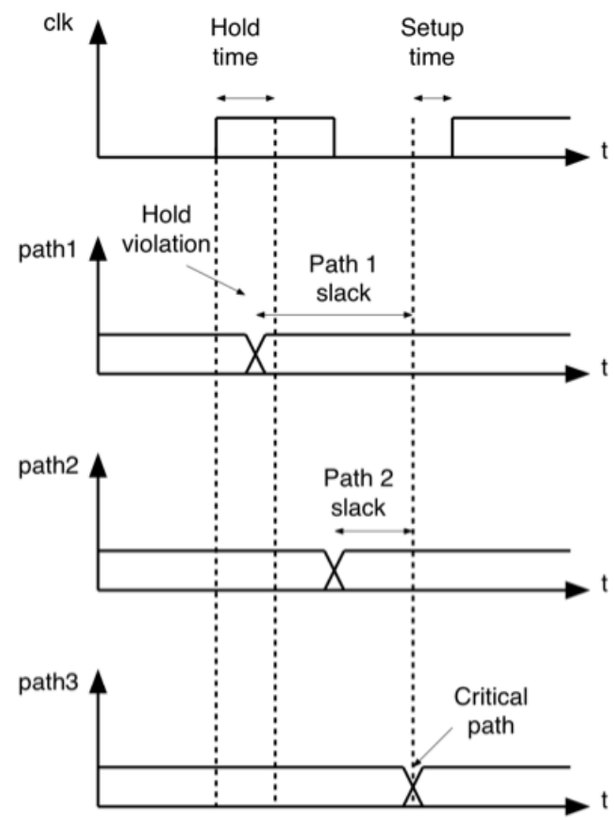


- Positive slack is good
  - If very large means we are wasting power
  - Also means the possibility of hold time violation is high

# SOLVING HOLD-TIME VIOLATIONS

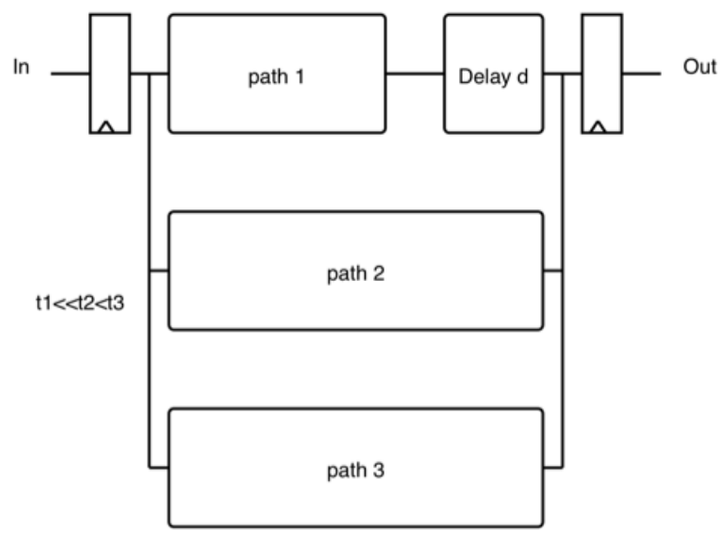


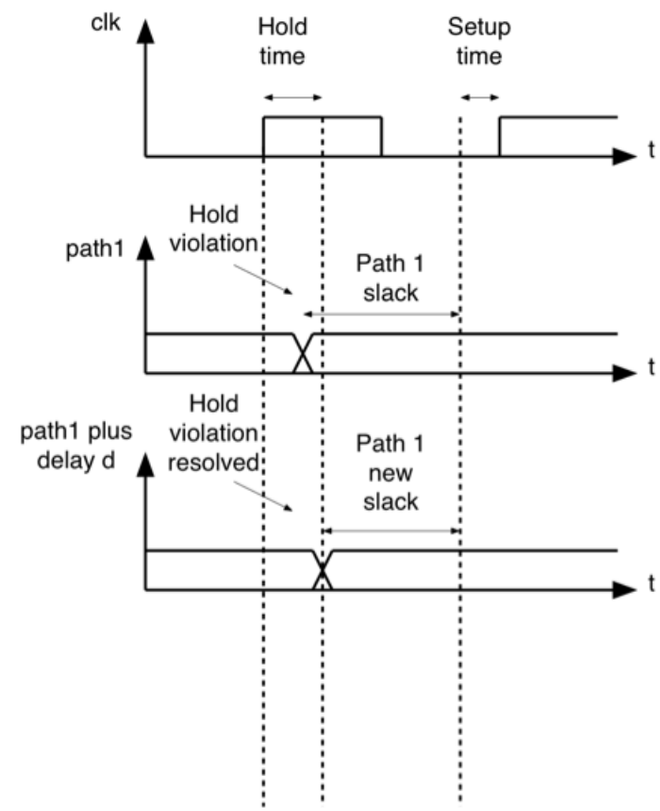


- Occur after the active edge so cannot solve by decreasing frequency
- Solved by adding delay elements in offending path

# SETUP-TIME VIOLATIONS

- Appears as negative slack
- Can result from constraints in the design flow
- Solve by reducing frequency till slack is null
- Solve by pipelining offending path

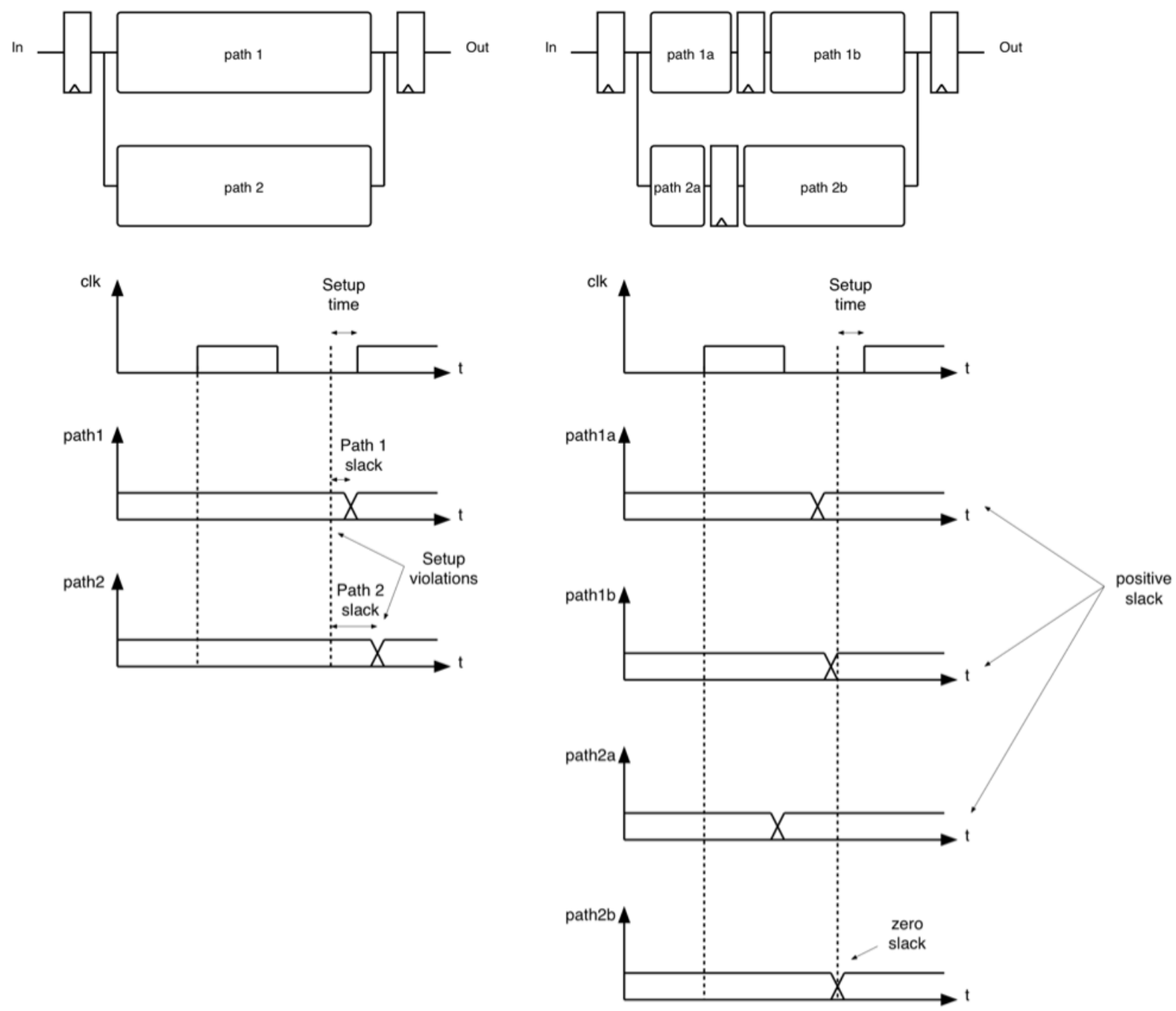

# POWER, DELAY, AND ENERGY

- Power and delay alone are not very significant
- Compare either
  - Power for the same throughput
  - Throughput for the same power
  - The product of power and delay
- Power delay product is the energy to produce one sample

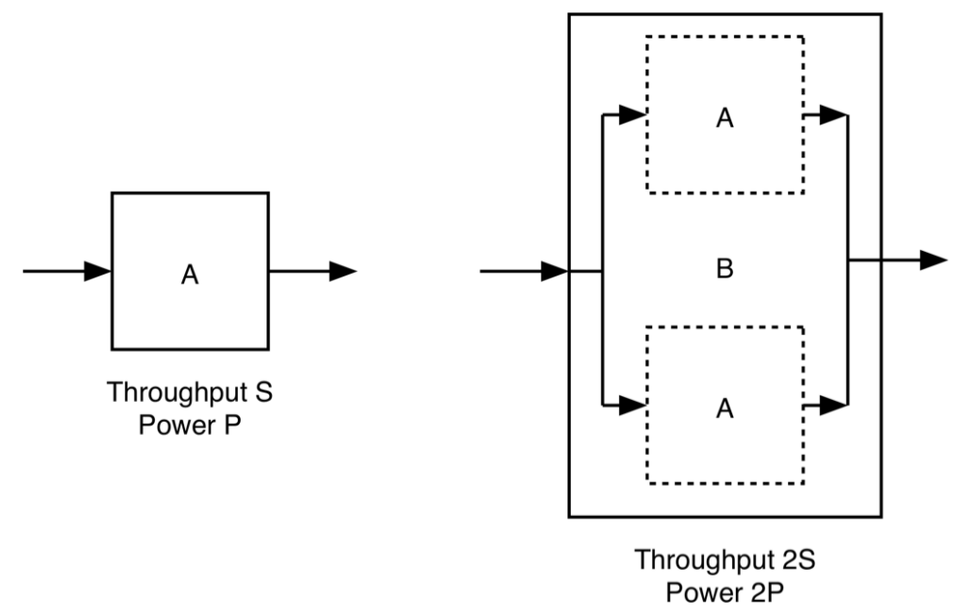

# TRADEOFFS IN POWER

$$t_{pd} \alpha 1/V_{DD} \qquad t_{pd} \alpha 1/f$$

$$f \alpha V_{DD}$$

$$P \alpha f \qquad P \alpha V_{DD}^2$$

- Active power is a very strong function of supply
- It is also directly proportional to frequency
- Frequency is also directly proportional to supply

# PARALLELISM FOR POWER MANAGEMENT

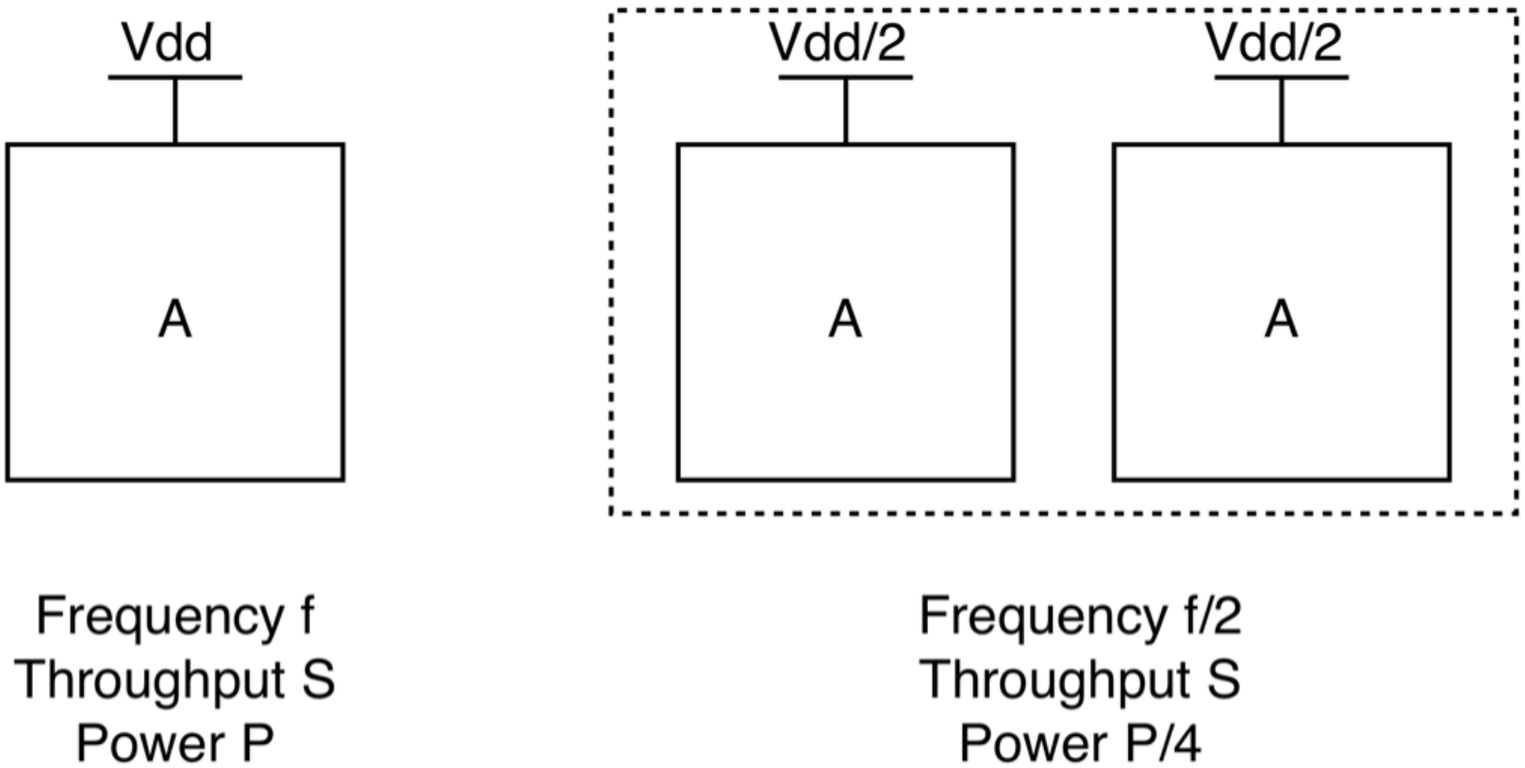


- Instead of the double throughput back off frequency and supply and obtain much lower power for the same throughput
- Price is area and noise margins

# PIPELINING AND POWER

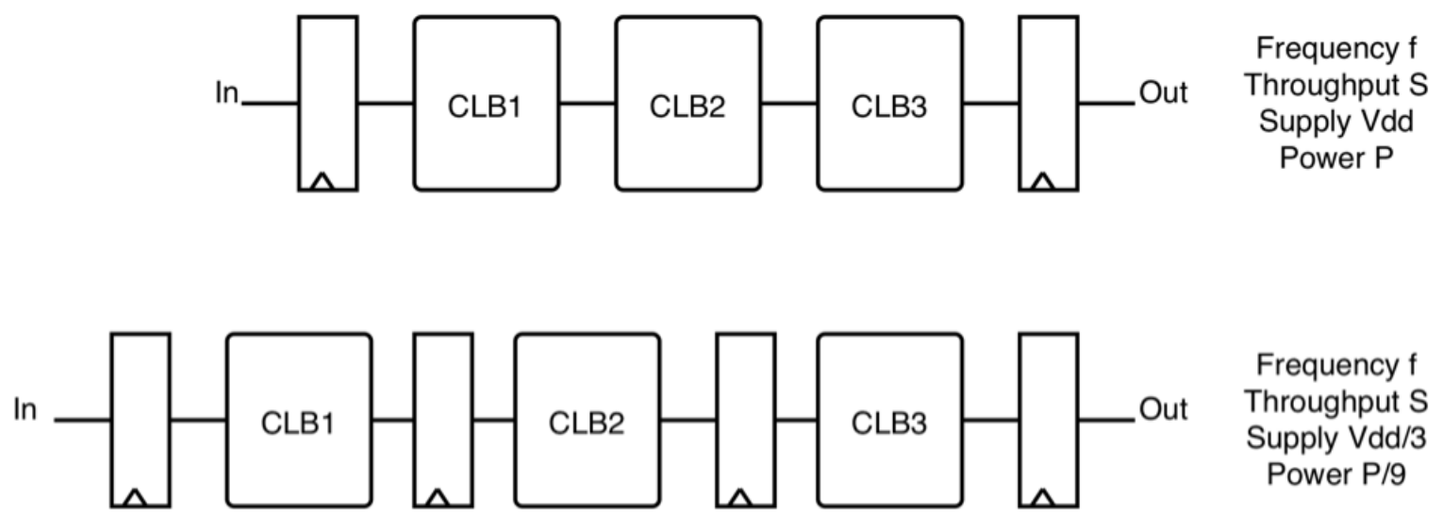


- Very similar to parallelism
- Trade off excess speed for supply and power

# SLACK NULLIFICATION

- Any path with slack is working faster than it should
- Reduce its supply till its slack is null
- Make all paths critical

| Path | Original delay | Original slack | Original power | Supply reduction | New slack | New power |
|---|---|---|---|---|---|---|
| Path1 | 10 | 30 | P1 | 4 | 0 | P1/16 |
| Path2 | 15 | 25 | P2 | 2.67 | 0 | 9P2/64 |
| Path3 | 40 | 0 | P3 | 1 | 0 | P3 |
| Path4 | 30 | 10 | P4 | 1.33 | 0 | 9P4/16 |
| Path5 | 20 | 20 | P5 | 2 | 0 | P5/4 |

# SLACK MINIMIZATION VERSUS NULLIFICATION

- Supply and ground distribution is no easy task
- We do not have access to a continuous supply range
- Usually a couple of supplies
- Pick from low and high for blocks in the path
  - Back off if slack is negative
  - Must manage logic values and margins

# SLACK MINIMIZATION

- Each path assigned one of the two supplies
- Decision determined by the amount of initial slack

| Path | Original delay | Original slack | Lowest possible | Chosen supply | New delay | New slack | Power saving |
|---|---|---|---|---|---|---|---|
| Path1 | 10 | 30 | 0.33 | Low | 16.67 | 23.33 | 2.78 |
| Path2 | 15 | 25 | 0.375 | Low | 25 | 15 | 2.78 |
| Path3 | 40 | 0 | 1 | High | 40 | 0 | 1 |
| Path4 | 30 | 10 | 0.75 | High | 30 | 10 | 1 |
| Path5 | 20 | 20 | 0.5 | Low | 33.33 | 6.67 | 2.78 |
| Total | | 85 | | | | 55 | |

# SLACK NULLIFICATION

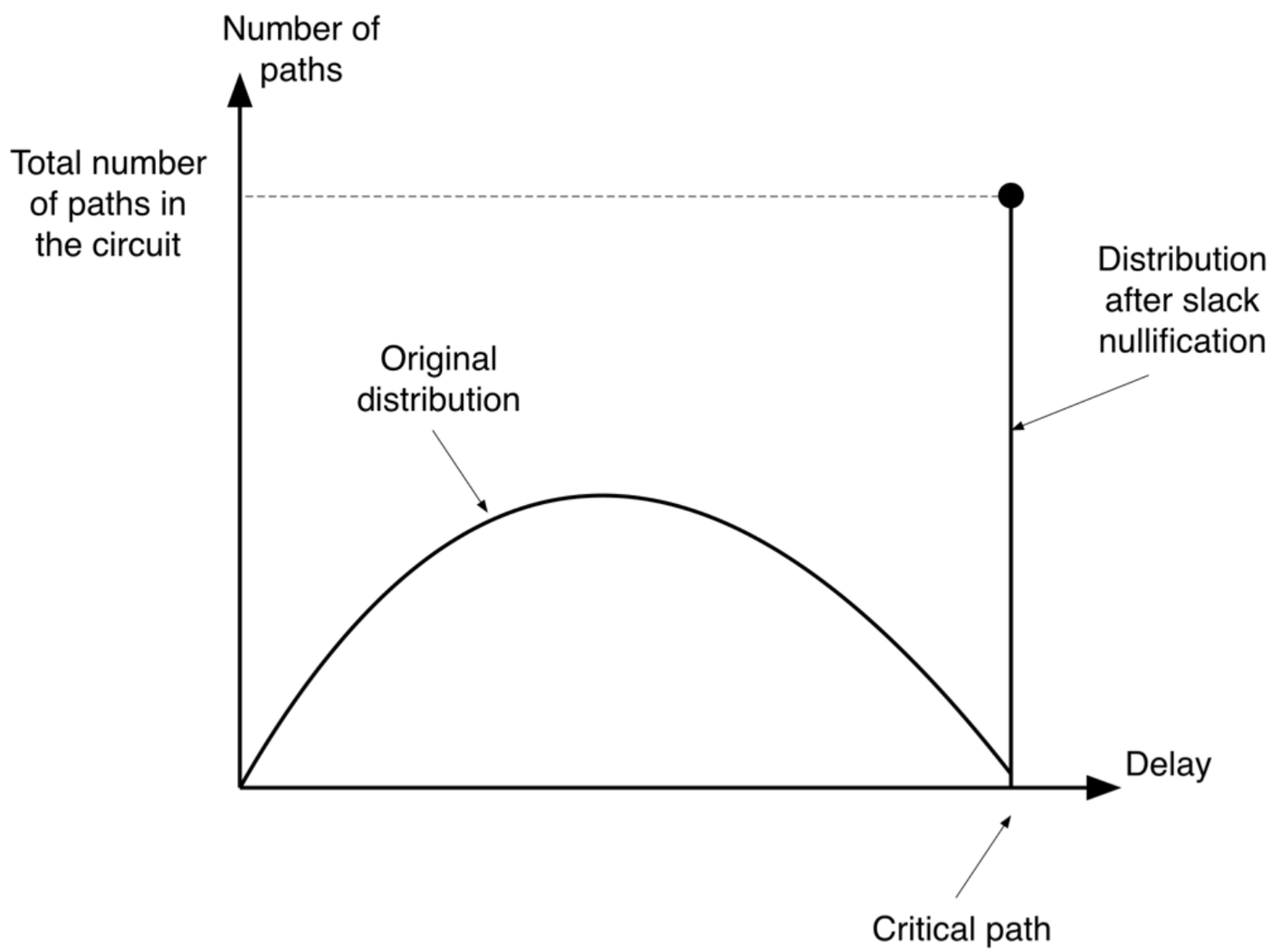

# SLACK MINIMIZATION

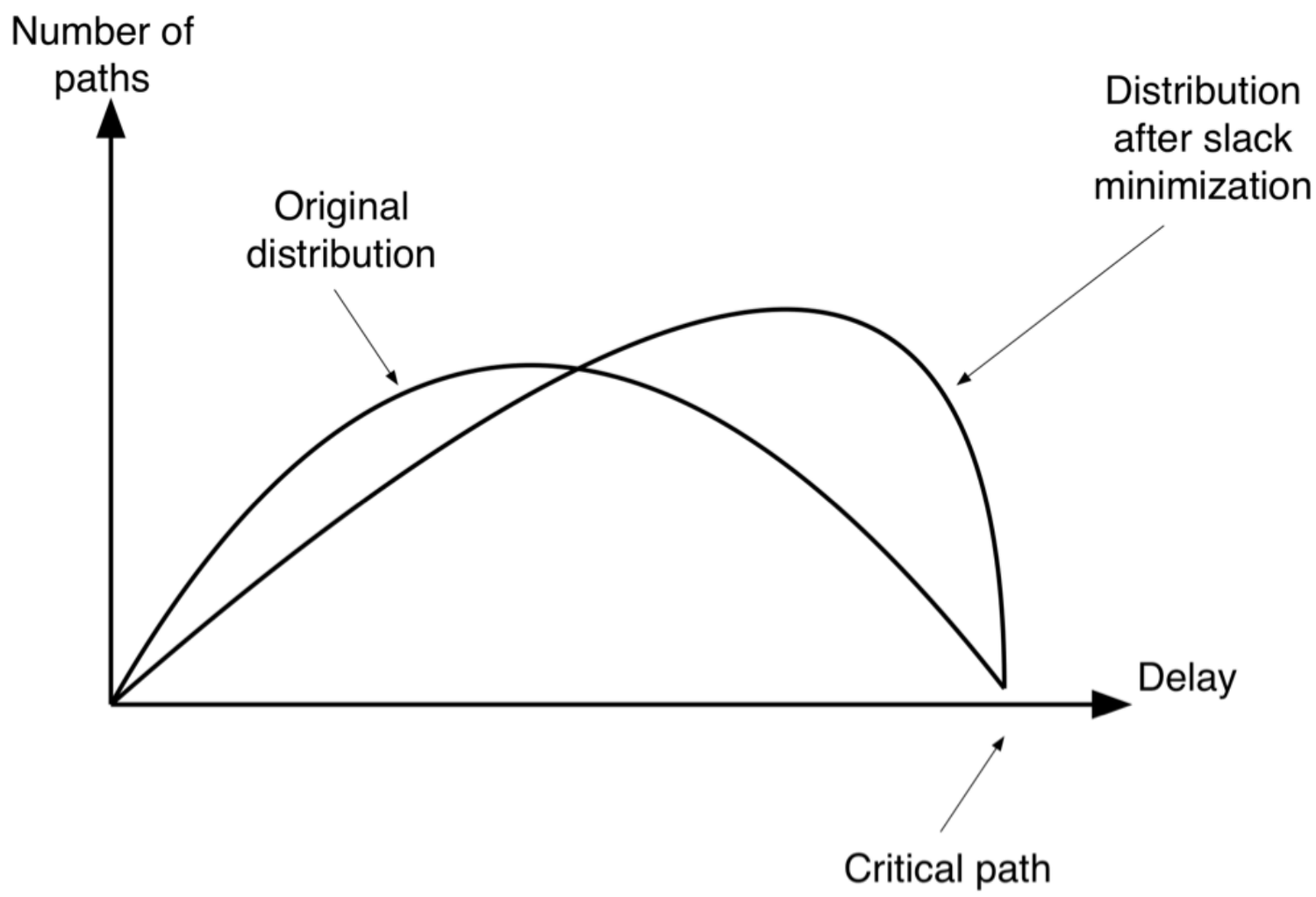

# TRUTH TABLE OF THE FULL ADDER

- Used for N-bit addition

| A, B, Cin | S | Cout |
|---|---|---|
| 000’ | 0 | 0 |
| 001’ | 1 | 0 |
| 010’ | 1 | 0 |
| 011’ | 0 | 1 |
| 100’ | 1 | 0 |
| 101’ | 0 | 1 |
| 110’ | 0 | 1 |
| 111’ | 1 | 1 |

# LOGIC FUNCTIONS FOR SUM AND CARRY OUT

- S cannot be minimized

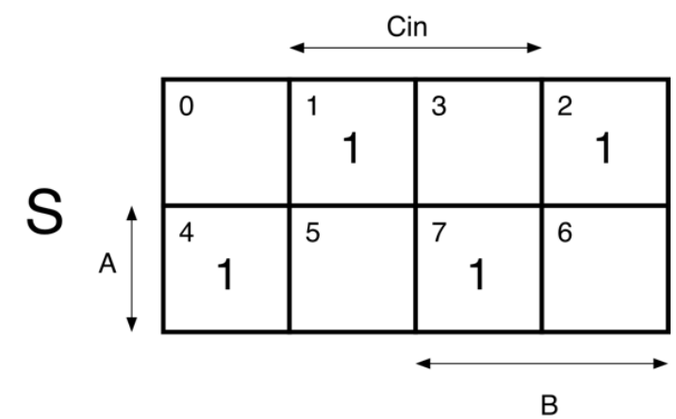


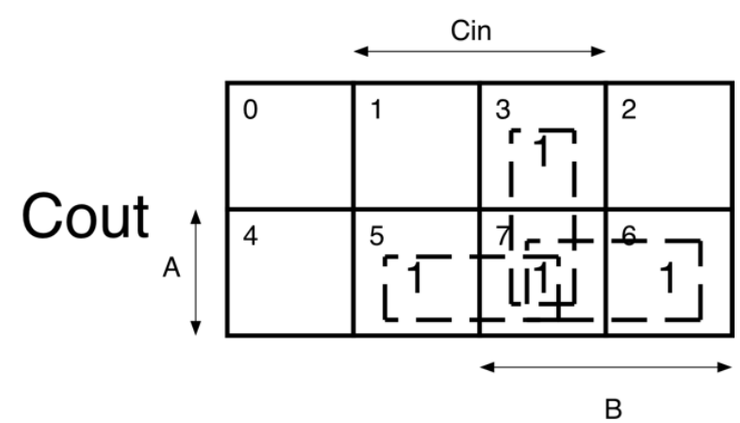

# NAIVE IMPLEMENTATION OF S

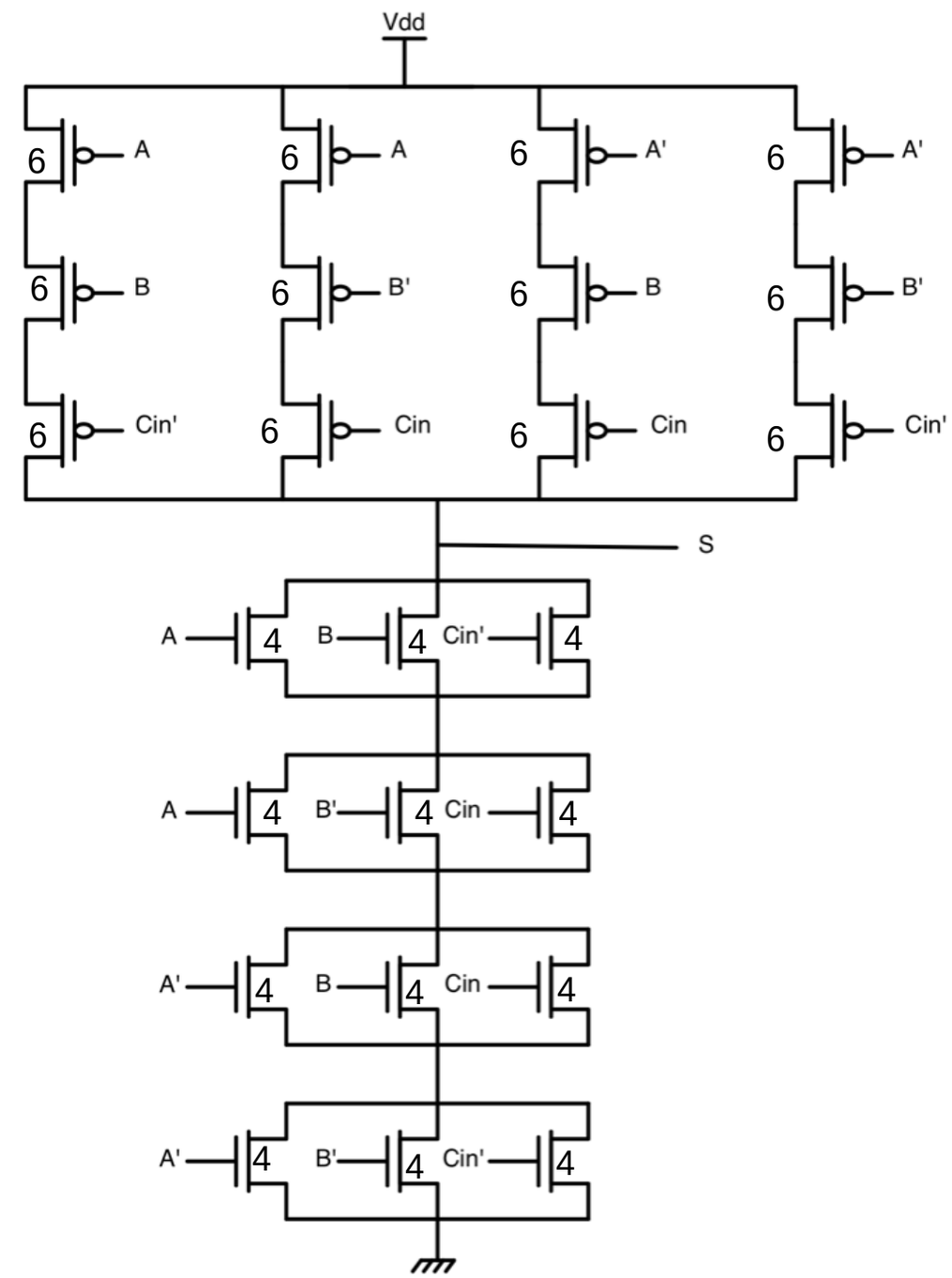

# NAIVE IMPLEMENTATION OF COUT

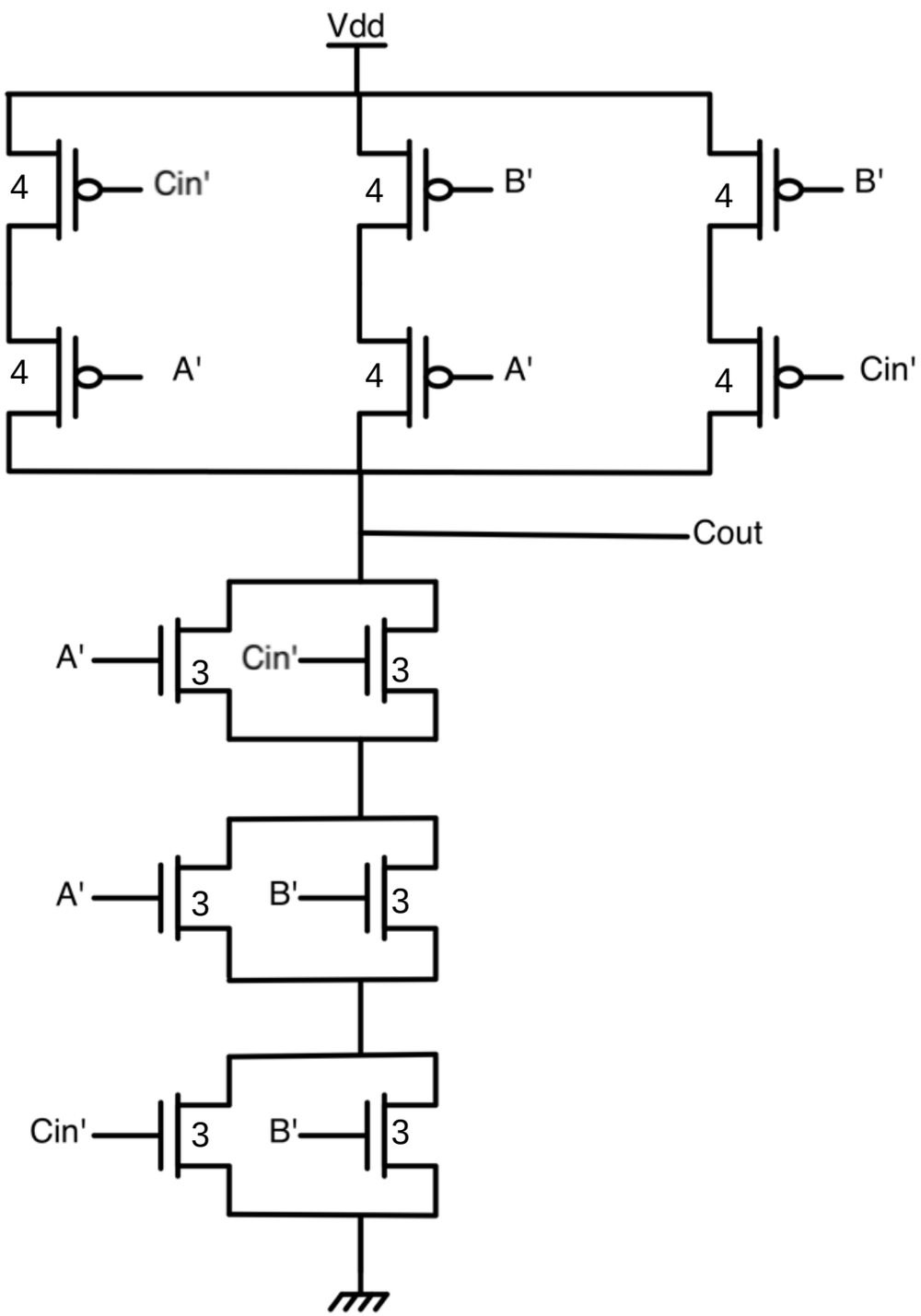

# CRITICAL PATH OF THE N-BIT ADDER

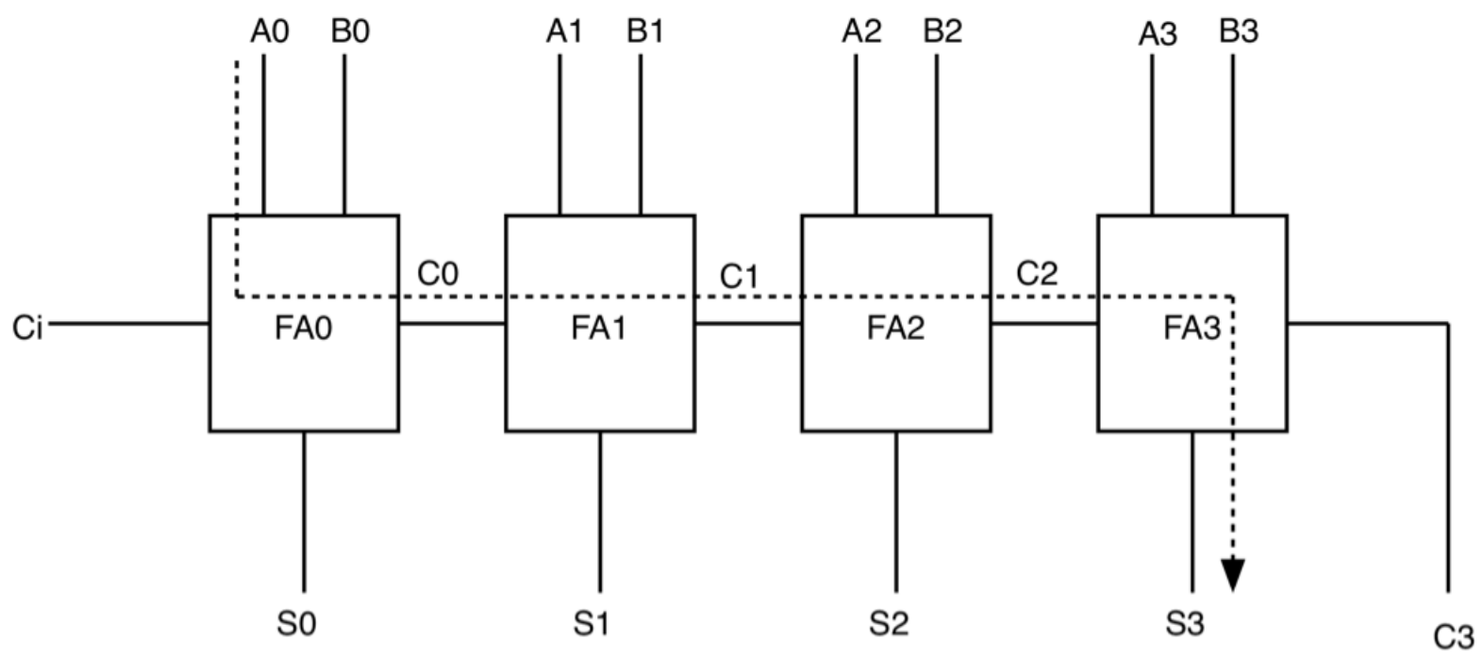


- Assume I/O registers everywhere
- All FAs are awaiting input carries
- Critical path must propagate through the whole inverter

# INTERNAL PIPELINING OF THE 4-BIT ADDER

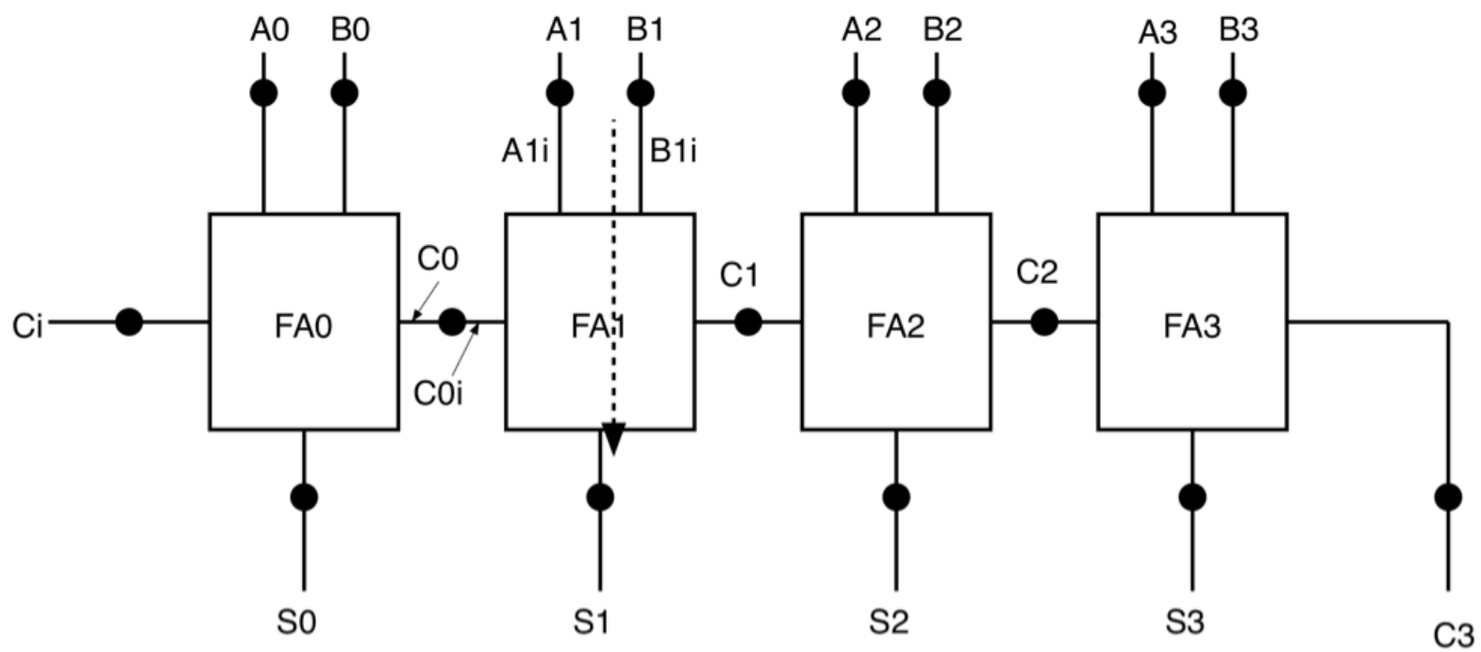


- Reduces critical path to Tsum
- Signals are not aligned

# PIPELINED ADDER WITH ALIGNED SIGNALS

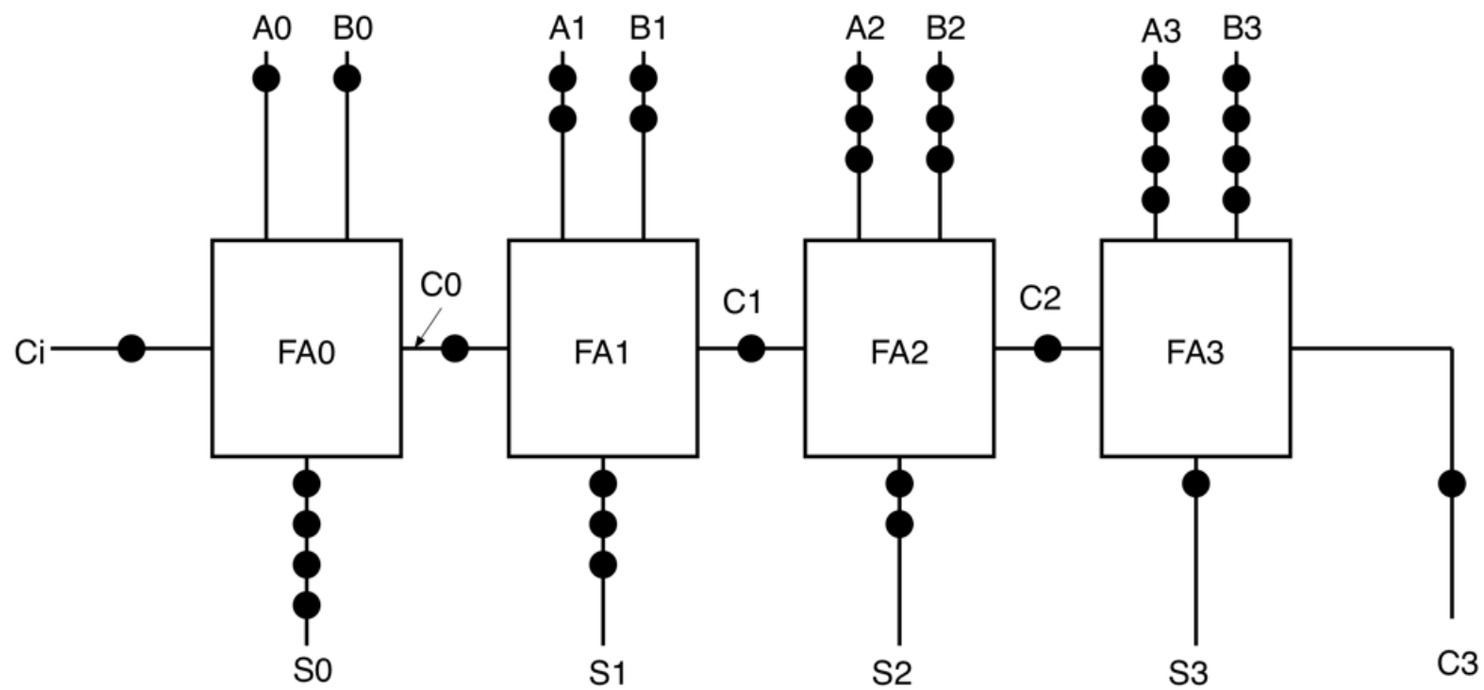


- Pipelining can create long shift registers

# TWO LEVEL CMOS

- Function created by cascading two CMOS levels

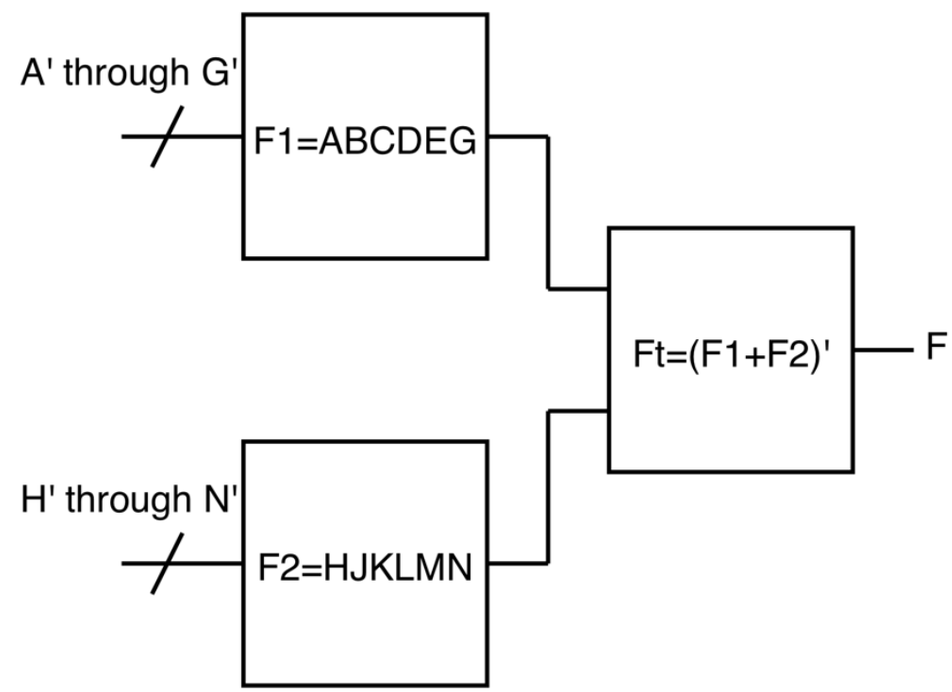

# CRITICAL PATH WITH AND WITHOUT INTERNAL PIPELINING

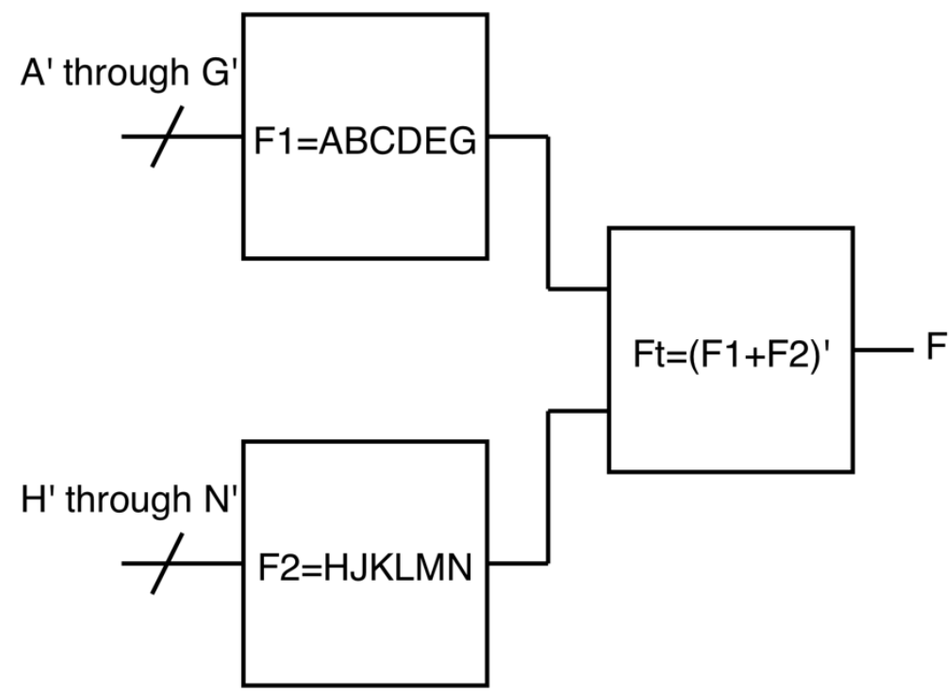

# THREE LEVEL PIPELINING

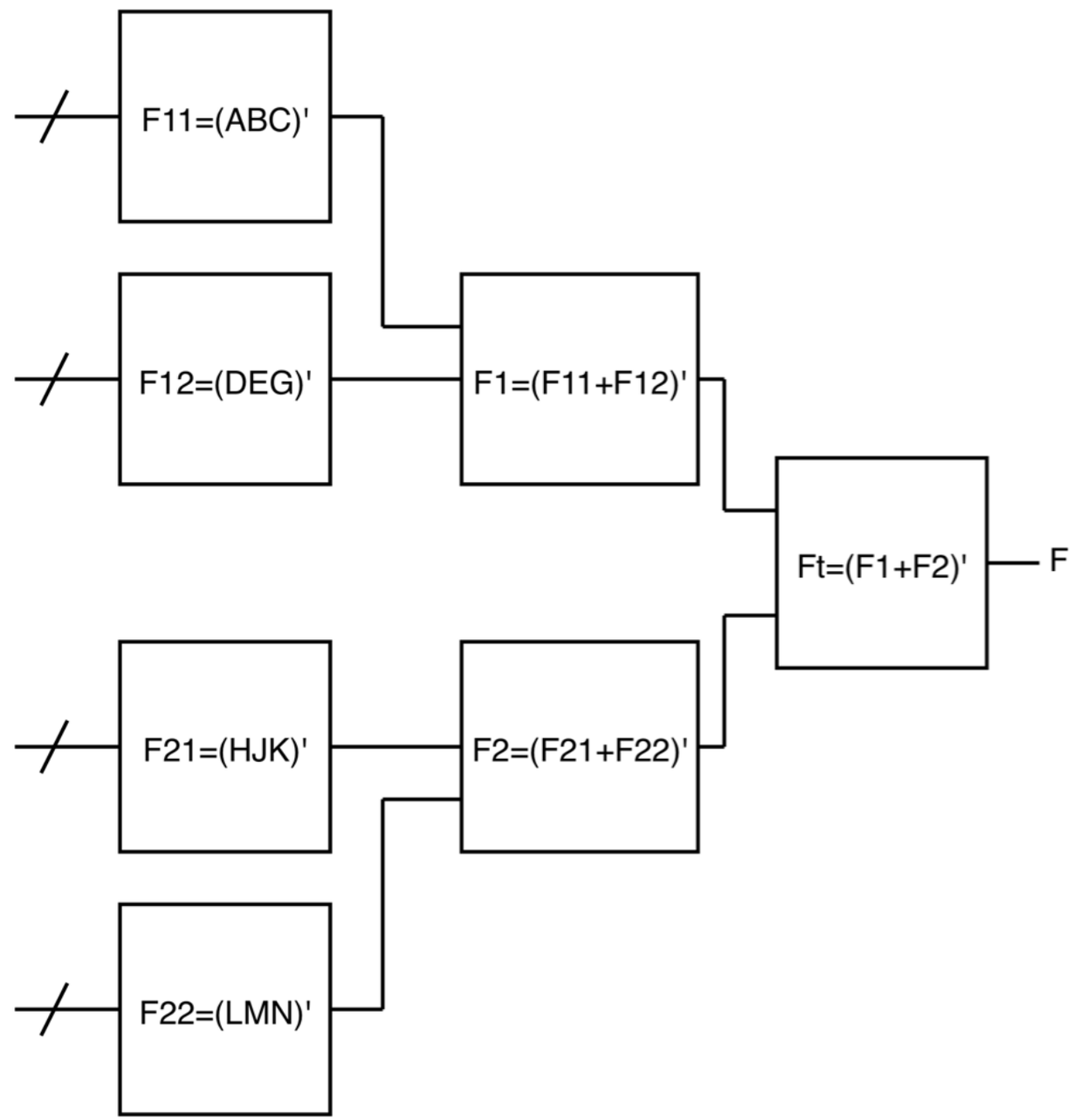
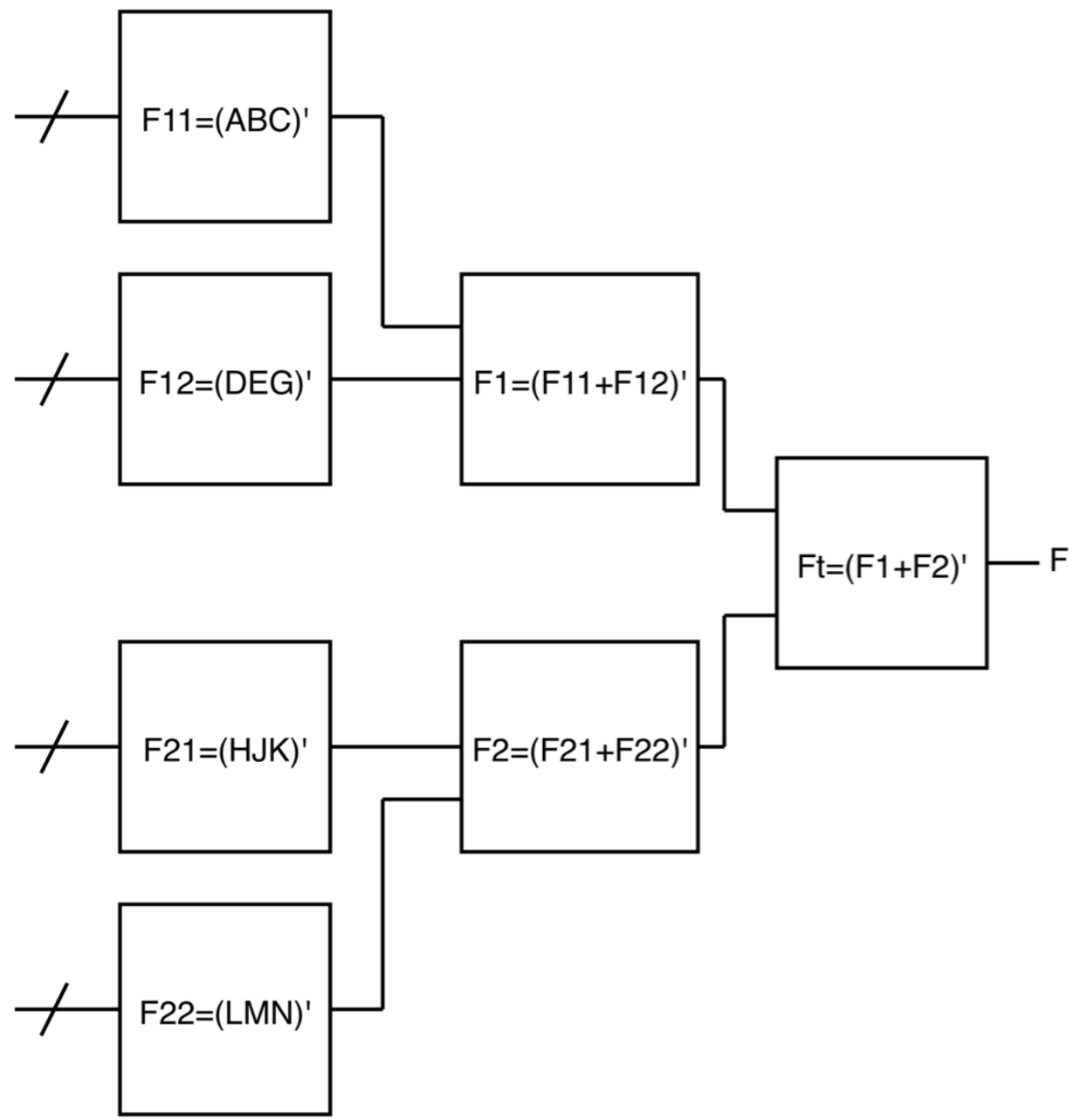
# THREE LEVEL PIPELINING PATH DELAYS